SMEC
SAMSUNG MACHINE TOOLS

SMEC Co., Ltd.
666, Gasul-ri, Daesan-myeon, Changwon-si Gyeongsangnam-do, Korea 641-921
Tel +82 55 250 4800 Fax +82 55 253 5355
http://www.esmec.com

www.esmec.com

SAMSUNG Machine Tools

LCV 500

VERTICAL MACHINING CENTER

SMEC
SAMSUNG MACHINE TOOLS

SMEC *Smart One, Global One*

LCV 500

Designed for high speed and productivity also ultra precision machining

SAMSUNG'S Advanced Engineering and Machine Design

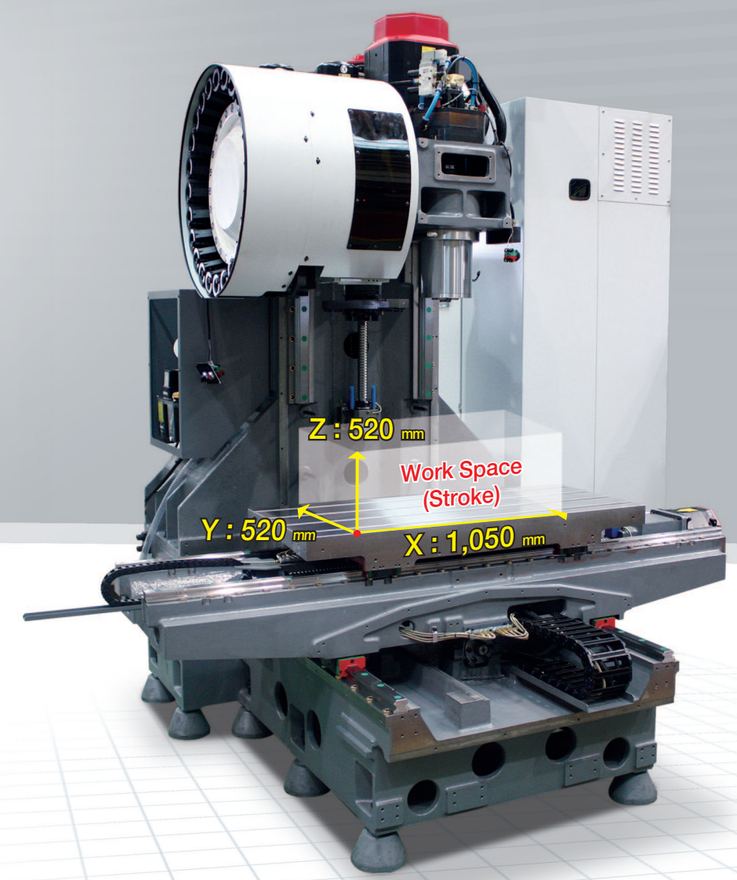

Max. Speed
10,000 rpm (Direct Drive)
8,000 rpm (Belt Drive)

Spindle Motor(30min/Cont.)
15 / 11 kW

Spindle Torque
95.1 / 69.6 N.m

Rapid Traverse (X/Y/Z)
36/36/30 m/min

Table Size
1,200×510 mm

Tool Magazine Capacity
24ea / 30ea (Opt.)

High speed, Ultra precision
Vertical machining center!

- The Largest machining capacity in its class
- Applying low-centered box structure and Rigid one piece cast iron bed
- Applying the widest linear guide way span and the widest saddle in its class to prevent overhang
- Available with direct drive spindle and belt drive spindle for user's preference.

Direct Drive

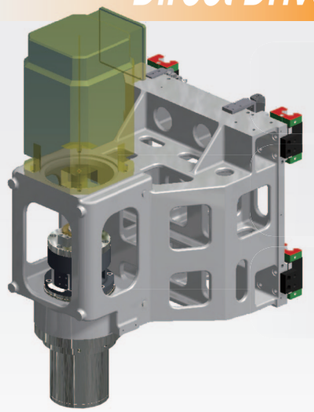

Spindle Speed
10,000 rpm

Spindle Motor
15 / 11 kW

Spindle Torque
95.1 / 69.6 N.m

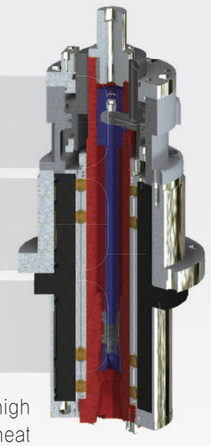

The spindle is supported by four P4 class high precision angular ball bearings to minimize heat increment. Also belt head takes forced heat emission to minimize thermal expansion to provide high speed and ultra precision machining.

Belt Drive

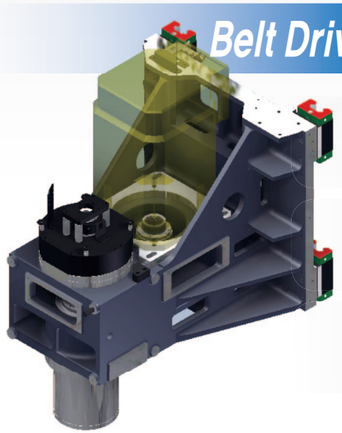

Spindle Speed
8,000 rpm

Spindle Motor
15 / 11 kW

Spindle Torque
95.1 / 69.6 N.m

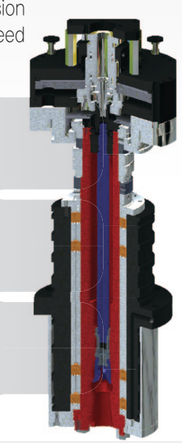

Spindle Power and Torque Diagram

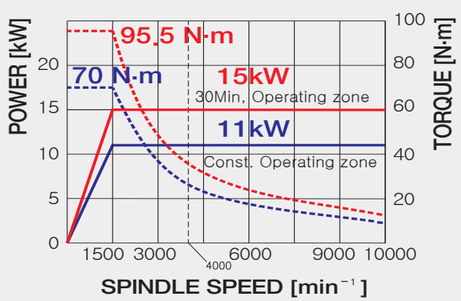

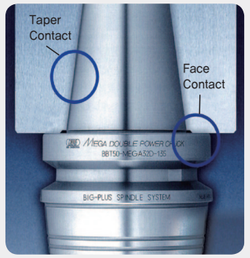

Big Plus BBT40
(Simultaneous Dual Contact)

Spindle Oil Cooling System(Opt.)

■ Machine Structure

Head Assembly

Direct drive for high speed
– Ultra precision and belt drive for coolant thrugh spindle option.

Z–axis column & headstock

Applying wide guide plane and high rigidity column to ensure high precision and smooth finish during heavy cutting.

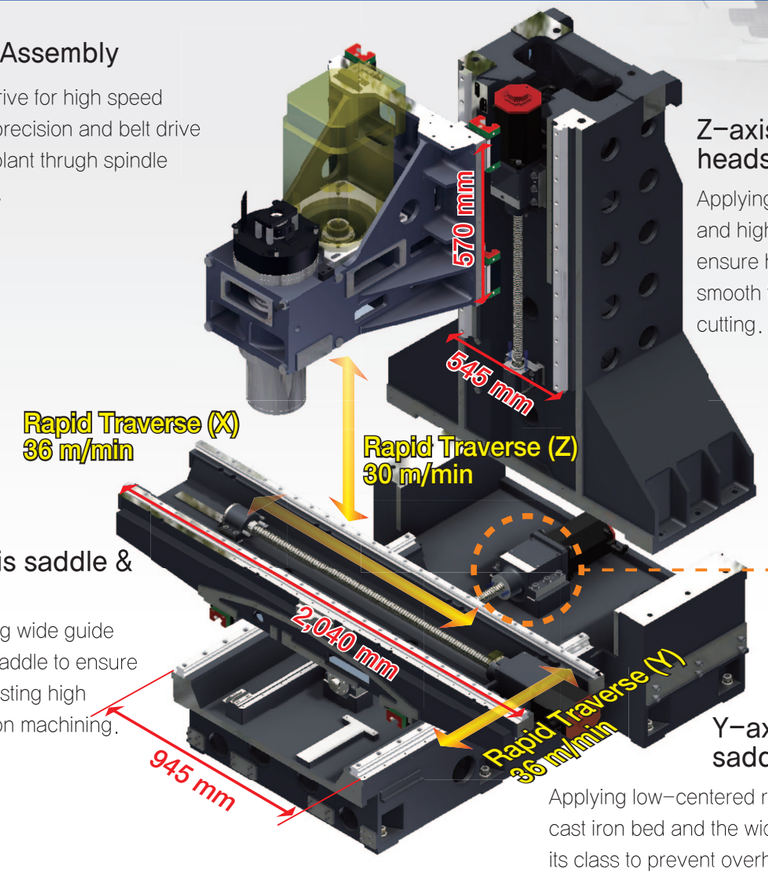

X–axis saddle & table

Applying wide guide plane saddle to ensure long–lasting high precision machining.

Y–axis bed & saddle

Applying low–centered rigid one piece cast iron bed and the widest span in its class to prevent overhang.

Large Ø40 ball screws clamped both ends with pretension type axis moving structure.

Minimal Thermal expansion is achieved by applying pretensioned ballscrews clamped both ends. Both ends are secured by four P4 class high precision thrust angular bearings and the bearings are lubricated by forced lubrication system to provide extended life of the bearings.

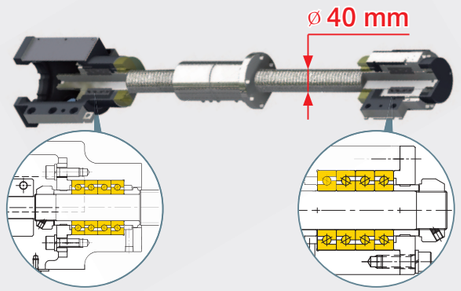

Machine Structure

Centralized utility check

With the centralized utility check layout, operators can easily check operation status of lubrication, bearing fluid, air supply. Etc

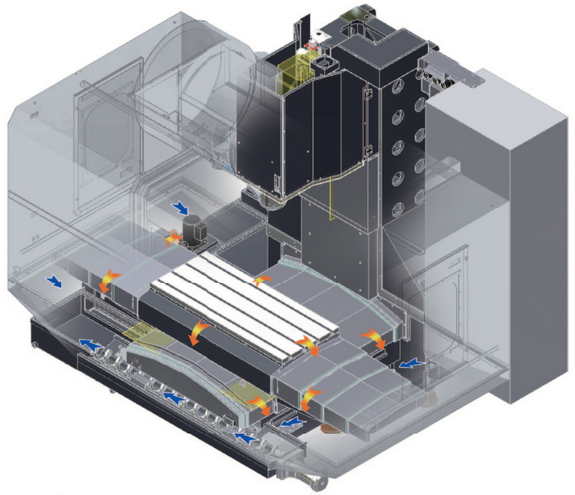

Easy chip disposal and high volume coolant system

High volume of flushing coolant allows minimal chip build-up, and slanted splash guard design effectively moves chips out to the machine.

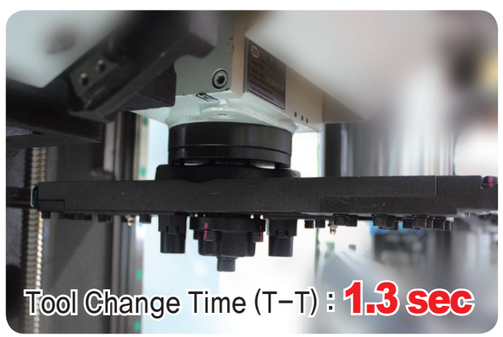

Twin arm type tool changing system.

Applying memory random type high speed tool changing system provides the fastest tool change time in its class.

Tool Magazine

Applying the largest capacity magazine in its class with short distance moving system provides high speed tool change time.

Tool Magazine Capacity*(ea)*

24 / 30(Opt.)

Machine Structure

■ User friendly centralized control panel.

❶ CRT : 10.4 inch color LCD

❷ Bigger BEZEL switch size : 50% larger than the conventional switch size

❸ Addition of MG stand-by tool No

❹ Addition of MG change button

❺ Addition of 4th and 5th axis switch

❻ Spindle Overide
50~120%(15 step)
→ 50~150% (20 step change)
Feed Overide
0~1260 (16 step)
→ 0~5000 (21 step)

❼ Addition of spare buttons for fixtures

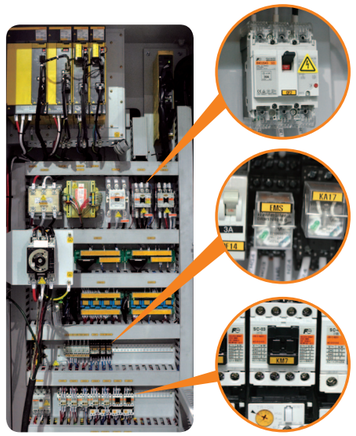

■ Electric Cabinet Made with Highly Reliable Components

- Magnet switch, circuit breaker, Key S/W (Fuji)
- Relays (Widemuller, Omron)

SMEC Package 2 (FAST DATA SERVER + AICC II) Option

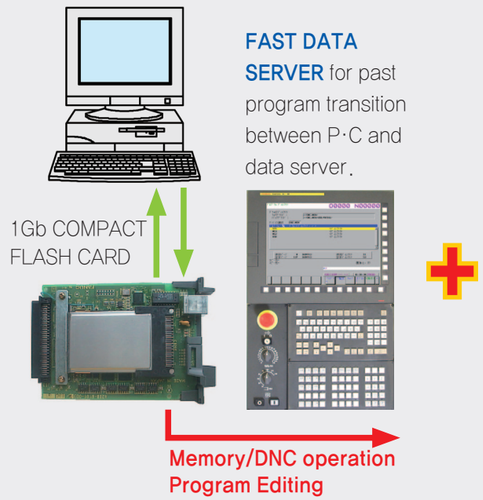

Achieving high speed-high precision with AICC II

CNC MODEL	FOi -MD	31i
Look-Ahead block	200	200
Nano interpolation	○	○
Acceleration/Deceleration before look-ahead interpolation	Linear	Linear, Bell
Each axis acceleration setting	○	○
Auto corner deceleration	○	○
Circle radius velocity Clamp	○	○
Velocity Clamp of acceleration	○	○

■ Cutting Capacity (BT40 11/15KW)

Face mill Carbon Steel (SM45C)

Ø100mm Face mill (5Z)

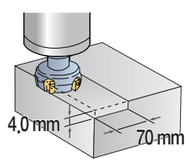

Cutting amount: 182 ㎤/min
Spindle speed: 600 r/min
Feedrate: 650 mm/min

Face mill Alumium (AL6061)

Ø80mm Face mill (5Z)

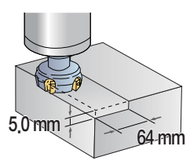

Cutting amount: 403 ㎤/min
Spindle speed: 1,500 r/min
Feedrate: 1,260 mm/min

End mill Carbon Steel (SM45C)

Ø30mm End mill (6Z)

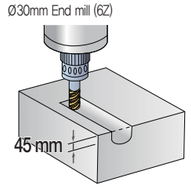

Cutting amount: 65 ㎤/min
Spindle speed: 230 r/min
Feedrate: 48 mm/min

■ High Precision

■ Roundness

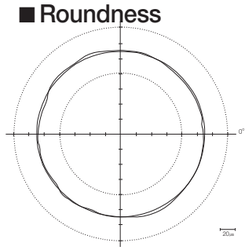

5.80㎛

Roundness

Machine	LCV 500
Material	A 1050P
Tool	ø25×4T
Spindle Speed	1,500RPM

Surface Roughness 〈O.D. cutting〉

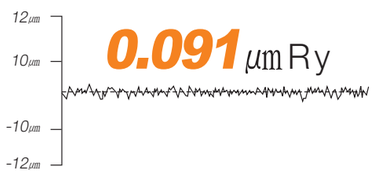

0.091 ㎛Ry

■ Accessories (Option)

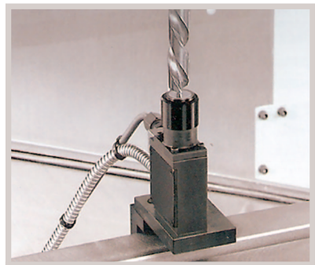
AUTO TOOL LENGTH MEASUREMENT SYSTEM


GUN COOLANT

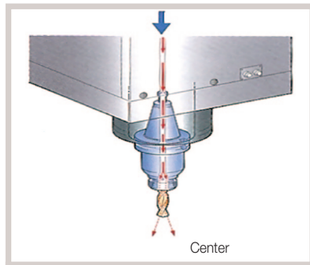

THROUGH-SPINDLE COOLANT SYSTEM

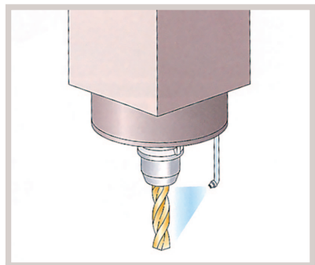
OIL MIST SYSTEM


CNC ROTARY TABLE


CHIP CONVEYOR

■ Machine Dimensions

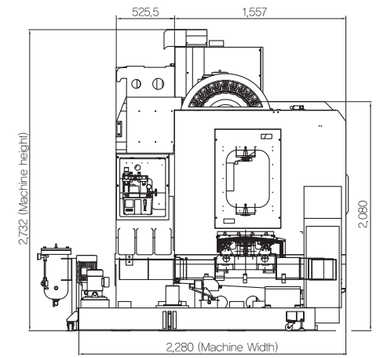

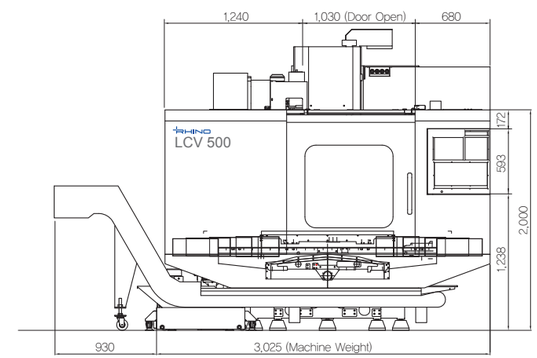

■ Table & T-Slot

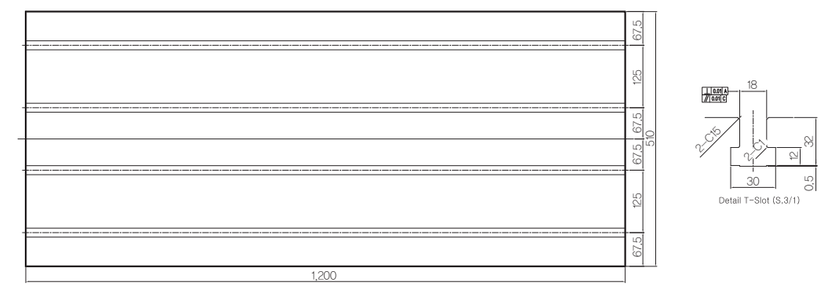

■ Tool Shank

Unit : mm

BT40

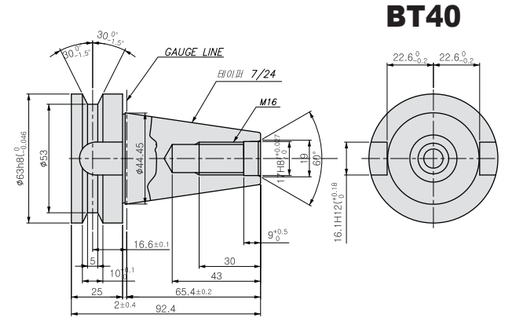

PULL STUD

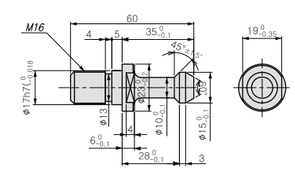

Machine Specification

Item			LCV 500
Travel	X-axis	mm	1,050
	Y-axis	mm	520
	Z-axis	mm	520
	Distance from table surface to spindle nose	mm	130 ~ 650
	Distance from pallet center to column	mm	587
Table	Table Size	mm	1,200 × 510
	Loading capacity	kgf	800
	Table index time	sec	–
Spindle	Max. Spindle Speed	min^{-1}	10,000 (Belt drive : 8,000)
	Maximum Torque(30min/cont.)	N.m	95.1 / 69.6
Feedrate	Rapid Traverse(X/Y/Z)	m/min	36/36/30
	Feedrate(X/Y/Z)	mm/min	1~15,000
ATC	Tool Shank	–	BT40
	Tooling changing method	–	Double arm swing
	Tool Changing Time(T-T)	sec	1.3
	Magazine Capacity	ea	24 (30)
	Tool Selection	–	Memory Random
	Max. Tool dia./adjacent empty	mm	Ø80 [150]
	Max. Tool Length/Weight	mm/kgf	300 / 7
	Pull stud type	–	45˚ Type
Motors	Spindle Drive Motor(30min/Cont.)	kW	15 / 11
	Feed motor(X/Y/Z)	kW	3 / 3 / 4
Power Supply		kVA	30
Floor Space (L×W×H)		mm	2,430 × 3,025 × 2,732
Machine Weight		kgf	6,200
CNC System			Fanuc 0*i*-MD

• Design and specifications subject to change without notice.

( ) : Option

Standard

- TOOL AND TOOL BOX
- WORK LIGHT
- MPG
- COOLANT SYSTEM AND TANK
- FULL SPLASH GUARD
- 24 MAGAZINE

Optional Accessories

- CHIP CONVEYOR
- 3AXIS MPG
- THRU SPINDLE COOLANT
- AUTO TOOL LENGTH MEASUREMENT
- ROTARY TABLE 4thAXIS, 5thAXIS
- LINEAR SCALE FEED BACK SYSTEM(X,Y,Z)
- 30 MAGAZINE
- THRU SPINDLE COOLANT

NC Specification / FANUC 0*i*-MD

Item		Specification	F 0*i*-MD
Controlled axis	feed axes		X,Y,Z,(A,B)
	Max. feed axes		4(6) AXIS
	Max. simultaneosly controlled axis		4
	Least command increment	0.001mm / 0.0001˚	○
Operation functions	Pulse handle feed	X1, X10, X100	○
	Feedrate per minute	G94	○
	Feedrate per revolution	G95	○
Interpolation functions	Linear interpolation	G01	○
	Circular interpolation	G02, G03	○
	Dwell	G04	○
	Cylindrical interpolation	G70.1	○
	Reference position return	G28	○
	Reference position return check	G27	○
Feed function	Rapid traverse rate override	F0, 25%, 50%, 100%	○
	Feedrate override		0~200%
Spindle function	Spindle orientation		○
	Rigid tapping		○
Tool functions	Tool number command	T4-Digt / T2-Digt	T2-Digt
	Tool nose radius compensation	G40 ~ G42	○
	Tool offset pairs		400
	Tool geometry/wear offset	GEOMETRY & WEAR DATA	○
	Tool life management		○
	Tool path graphic display		○
	Automatic tool length measurement		○
Program input	Absolute/incremental programming		○
	Multiple repetitive cycle	G70 ~ G76	○
	Canned cycles	G90, G92, G94	○
	Inch/metric conversion	G20 / G21	○
	Program restart		○
	Retraction for rigid tapping		○
	Max. programmable dimension	±99999.999mm/±9999.9999˚	○
	M function	M3 digit	○
	Custom macro		○
	Canned cycle for drilling		○
	Direct drawing dimension programming		○
	Programmable data input	G10	○
	Optional block skip		○
	Workpiece coordinate system	G52 ~ G59	○
	Number of registerable programs		400EA
Setting and display	Alarm & Operator histor display	ALARM & OPERATION DISPLAY	○
	Run hour and parts count display	RUNNING TIME & PART NO. DISPLAY	○
	Display spindle & servo overload	SPINDLE & SERVO LOAD DISPLAY	○
	Self-diagnosis function		○
	Extended part program editing	COPY,MOVE, CHANGE OF NC PROGRAM	○
	Display screen		10.4˚ color
Data input/output	Memory card input/output		○
	USB memory input/output		○
Editing operation	Part program storage size	512Kbyte(1280m)	1280M
Manual guide i	Manual Guide I		Opt.